IJCRT.ORG ISSN : 2320-2882

INTERNATIONAL JOURNAL OF CREATIVE RESEARCH THOUGHTS (IJCRT)

An International Open Access, Peer-reviewed, Refereed Journal

Integration Of DFIG Wind Turbine In Hybrid Power System For Frequency Control -A Review

Rahul Bhargava[1], Amit Raghuwanshi[2], Dolly Thankacha[3]

[1]PG Scholar

[2]Assistant Professor

[3]Associate Professor & Head

EEE Department Oriental University, Indore (M.P.), India

Abstract- The integration of Doubly Fed Induction Generator (DFIG)-based wind turbines in hybrid power networks has gained significant attention due to the increasing penetration of renewable energy sources. However, the intermittent nature of wind energy poses challenges in maintaining system frequency stability. This review examines the role of DFIG wind turbines in frequency control within hybrid power networks, particularly in coordination with conventional generation and other renewable sources. Various frequency regulation strategies, including inertial response emulation, droop control, and advanced control techniques such as fuzzy logic and artificial intelligence-based controllers, are discussed. The impact of energy storage systems, demand-side management, and optimized control algorithms in enhancing frequency stability is also analyzed. Furthermore, the review highlights recent advancements, challenges, and future prospects in integrating DFIG-based wind turbines for effective frequency control in hybrid grids. The findings suggest that adaptive control strategies, optimization-based techniques, and hybrid energy storage integration can significantly improve frequency regulation performance.

Keywords–Doubly fed induction generators (DFIGs), frequency regulation, inertia control and maximum power point tracking.

I. Introduction

As the penetration ratio of wind power increases, methods of controlling the balance between supply and demand are of great importance. Power grid operators must consider any unsafe situations caused by change in wind speed or unpredictable power from renewable energy sources. Installed wind energy accumulated worldwide is growing rapidly. According to data from the Global Wind Energy Council (GWEC), there were 743 GW of wind power capacity worldwide in 2020 [1]. The trend to improve the frequency control performance of wind turbines is growing rapidly, as frequency stability is important for the operation of the grid. Wind power generation is growing rapidly among the various types of renewable energy sources and most wind farms are connected to transmission grids. The most common wind power generators are squirrel-cage induction generators (SCIG), double-feed induction generators (DFIG), and synchronous generators with full-power electronic converters [2]. For safer operation, wind turbine generation should be more grid-friendly [3]. Conventional variable speed wind turbines do not support frequency control when an emergency occurs on the grid. Therefore, if there is no frequency control

technology, the grid frequency changes, which shows the importance of frequency control technologies in wind turbines.

With the increasing global shift toward renewable energy, hybrid power networks combining conventional and renewable energy sources have gained significant attention. Among various renewable technologies, wind energy, particularly the Doubly Fed Induction Generator (DFIG) wind turbine, has become a preferred choice due to its variable speed operation, high efficiency, and grid-friendly characteristics. However, integrating DFIG-based wind turbines into hybrid power networks presents challenges, especially in terms of frequency control and system stability.

Frequency control is crucial for maintaining the balance between generation and demand, ensuring the reliable operation of the power grid. Unlike conventional synchronous generators, wind turbines, especially DFIG-based systems, have limited inertial response due to their decoupled power electronic interface. This characteristic makes them less effective in providing traditional frequency support, potentially leading to frequency instability, especially in networks with high wind penetration.

To address these challenges, various strategies have been proposed to enhance the frequency regulation capabilities of DFIG-based wind turbines in hybrid power networks. These include synthetic inertia control, droop control, coordinated control with battery energy storage systems (BESS), and advanced optimization-based controllers such as Particle Swarm Optimization (PSO) and Fuzzy-PID controllers. Additionally, hybrid networks incorporating solar, storage, and conventional power sources require well-coordinated control schemes to ensure dynamic frequency stability under fluctuating renewable energy conditions.

This review explores the latest advancements in DFIG wind turbine integration for frequency control in hybrid power networks. It discusses the key challenges, control strategies, and the role of optimization techniques in improving the overall frequency regulation performance. The review also highlights recent research trends and potential future directions for enhancing the stability and reliability of hybrid power systems with high wind energy penetration.

II. Types of Control Methods for Frequency Regulation

A. Virtual Inertia Control

Utilizing the inertial control, the dynamic vitality put away interior the wind turbine can be discharged when the framework frequency drops. Inertial control comprises of inactivity circle and hang circle, as appeared in Fig. 1. To begin with, the dormancy circle generates the sum of dynamic control alter that's proportional to the subordinate of the measured recurrence [4]. This response is just like the unique behavior of routine synchronous machines. Moment, the compensated control that is decided based on the recurrence deviation is called as the droop control.

As appeared in Fig. 1, the low-pass channel that's associated behind the recurrence differentiator can diminish the measurement blunder caused by clamor, and the high-pass filter that's set behind the recurrence deviation permits as it were the transitory component of recurrence to be passed. K is the proportionality coefficient for the idleness circle whereas the consistent 1/R can decide the output of the hang loop. That’s, in case the esteem of the 1/R is bigger, at that point the output of the hang circle is littler, vice versa [5].

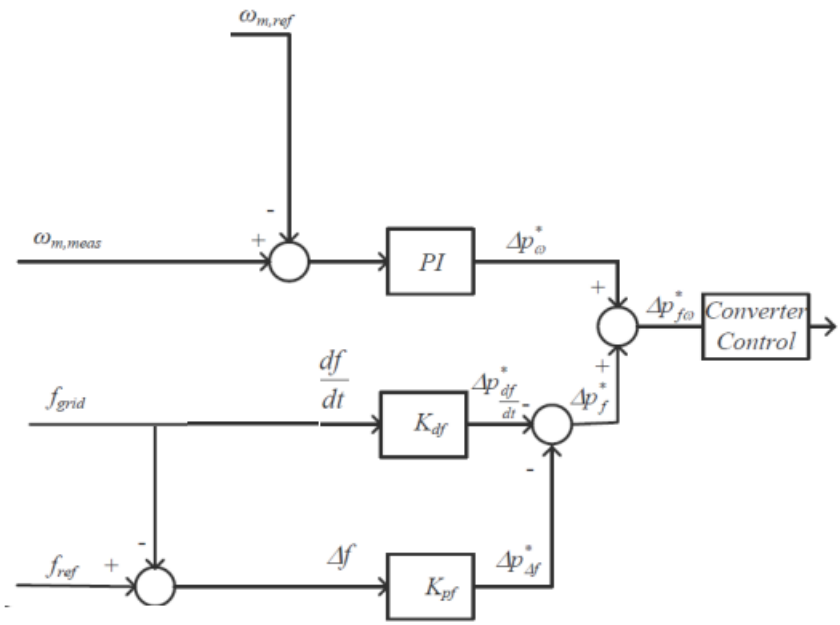

Fig. 1 Virtual inertia control

B. De-loaded Control

In typical working conditions, the edge of the WT assimilates control as much as conceivable. Be that as it may, it implies that the wind turbines cannot give overabundance control compensation. In other words, when the network recurrence changes, the control yield of the wind turbine is about constant. Hence, a few plans, such as the de-loaded power control or others, have been proposed to provide potential saved control in cases of recurrence drop. Within the de-loaded control, there are two common strategies to accomplish the objective for recurrence control: one is the control of the turbine speed, and the other is the pitch control [6-7].

C. Control of Wind System Frequency

With or without supplementary devices, the frequency of high-level renewable energy integrated wind systems is primarily managed. A thorough description of frequency management with various auxiliary devices, such as flywheel energy storage, batteries, supercapacitors, unified power flow controllers (UPFC), and superconducting magnetic energy storage (SMES), is given in this section. The extensive integration of wind farms into the power grid presents challenges in maintaining a stable frequency. A power electronics converter system connects the wind turbine generator to the grid, enabling the generator to function at varying speeds based on wind velocity. In this setup, the output from the variable-frequency generator is first converted to DC and then inverted to align with the grid frequency. However, without the incorporation of energy storage technologies, the converter system's capacity is dictated by the peak wind power. Consequently, the adoption of superconducting energy storage becomes essential for wind energy systems. When a SMES unit serves as the energy storage solution, the system benefits from efficient energy storage, rapid response, and precise control for power compensation.

III. DFIG based Gird Integration

The utilize of STATCOM for moving forward solidness of SCIG and DFIG based wind frameworks is examined in [8]. A decreased arrange DFIG demonstrate for solidness investigation is proposed in [9]. A nitty gritty demonstrate to think about control quality of a lattice is proposed in [10]. A nonspecific show of controller that employments molecule swarm optimization is proposed in [11]. The utilize of TurbSim,

Quick and Simulink for solidness investigation is detailed in [12]. In [13] the impact of different show parameters of DFIG based wind cultivate on transitory reactions is considered. A Reality based controller to smother the impact of sub-synchronous reverberation in arrangement compensated control framework containing acceptance generators is considered in [14]. A linearized show for DFIG based wind control plant associated to a arrangement compensated transmission line is proposed in [15]. It is proposed in [16] that a wind cultivate can be modeled in a way comparable to the customary generator for consistent state examination. The greatest extractable control from a renewable vitality source depends not as it were on wind but too on the working point of the vitality change framework. A common demonstrate that can be utilized to speak to all sorts of variable speed wind turbines in control framework reenactment thinks about is given in [17]. A control framework to function DFIG at diverse control figure and for greatest point following is proposed in [18]. A coordinate power control methodology for a DFIG based wind turbine framework is proposed in [19]. A sensor less most extreme wind control tracking controller is proposed in [20].

As per Ireland's network code, the wind turbine framework ought to remain associated amid the blame whereas voltage at the point of connection drops to 15% of the ostensible esteem for a period of 625 ms [21]. Amid blame, a network associated DFIG encounters serious rotor over streams which may harm the rotor side converter [22]. Ordinarily crowbar conspire is utilized to brief circuit the rotor when a blame happens [23]. Be that as it may, the genuine and reactive control yield of the DFIG cannot be controlled beneath this condition. An expression for calculating the DFIG top rotor blame current and required rotor voltage for accomplishing fault ride through are inferred in [24]. A control technique for limiting the dc interface voltage change is proposed in [25]. A scheme in which rotor side converter is detached and paralleled with network side converter for nourishing responsive control to lattice is proposed in [26-28].

IV. Conclusions

Numerous progressed and novel approaches for supporting recurrence control by wind turbines were proposed in later a long time. This paper summarizes the inertial control and power save control to bargain with the recurrence control issue, and examines the focal points and drawbacks of distinctive recurrence controllers in WTs. As the sum of wind power entrance is developed, the auxiliary benefit given by the wind turbines gets to be more critical to control systems. This paper has also focused on the diverse viewpoints of network integration of DFIG based frameworks. Indeed, in spite of the fact that there are numerous ways to bargain with network integration, more research is required to decide the foremost viable approach for particular circumstance. The recurrence steadiness is additionally vital for smaller scale networks. Due to the low inertia of smaller scale frameworks, it is challengeable to maintain the recurrence steadiness in smaller scale grids.

REFERENCES

1. R. Shakoor, M. Y. Hassan, A. Raheem, Y.-K. Wu, "Wake effect modeling: A review of wind farm layout optimization using Jensen's model", Renewable and Sustainable Energy Reviews, vol. 58, pp. 1048-1059, May 2016.
2. J. Ekanayake and N. Jenkins, "Comparison of the response of doubly fed and fixed-speed induction generator wind turbines to changes in network frequency," in IEEE Transactions on Energy Conversion, vol. 19, no. 4, pp. 800-802, Dec. 2004.
3. L. Wu and D. G. Infield, "Towards an Assessment of Power System Frequency Support from Wind Plant—Modeling Aggregate Inertial Response," in IEEE Transactions on Power Systems, vol. 28, no. 3, pp. 2283-2291, Aug. 2013.
4. T. Wang, L. Ding, S. Yin, J. Jiang, F. Cheng and J. Si, "A new control strategy of DFIG-based wind farms for power system frequency regulation," 2015 IEEE PES Asia-Pacific Power and Energy Engineering Conference (APPEEC), Brisbane, QLD, 2015, pp. 1-5.

5. M. Dreidy, H. Mokhlis, S. Mekhilef, "Inertia response and frequency control techniques for renewable energy sources: A review", Renewable and Sustainable Energy Reviews, vol. 69, pp. 144-155, 2017.
6. Y. C. Xue and N. L. Tai, “Review of contribution to frequency control through variable speed wind turbine,” Renewable Energy, vol. 36, pp. 1671–1677, Jun. 2011.
7. R. G. de Almeida, E. D. Castronuovo and J. A. P. Lopes, "Optimum generation control in wind parks when carrying out system operator requests," in IEEE Transactions on Power Systems, vol. 21, no. 2, pp. 718-725, May 2006.
8. V. Y. Singarao, S. Nimmagadda and V. Rao, "Economic Comparison of Deloaded-Wind and Wind-Battery Systems," 2014 Sixth Annual IEEE Green Technologies Conference, Corpus Christi, TX, 2014, pp. 126-131.
9. C. Pradhan and C. Bhende, “Enhancement in Primary Frequency Contribution using Dynamic Deloading of Wind Turbines.” IFAC-PapersOnLine, vol.48, pp.13-18, 2015.
10. Z. Wu, W. Gao, J. Wang and S. Gu, "A coordinated primary frequency regulation from Permanent Magnet Synchronous Wind Turbine Generation," 2012 IEEE Power Electronics and Machines in Wind Applications, Denver, CO, 2012, pp. 1-6.
11. K.Cheng, J.Lin, Y. Bao, and X.D. Xue, “Review of the wind energy generating system”, in Proc. Conf on Advances in Power System Control, Operation and Management, pp. 1–7, 2009.
12. H. Li, and Z. Chen, “Overview of different wind generator systems and their comparisons”, IET Renew. Power Gener., vol. 2, no. 2, pp. 123–138, 2008.
13. Y. Xue and N. Tai, “Review of contribution to frequency control through variable speed wind turbine”, Renewable Energy, in press.
14. M. Tsili, and S. Papathanassiou, “A review of grid code technical requirements for wind farms” IET Renew. Power Gener., vol. 3, no. 3, pp. 308–332, 2009.
15. L. Pablo and J. Usaola," Doubly fed induction generator model for transient stability analysis", IEEE Trans on Energy Conversion, vol. 20, no. 2, pp. 388–397, June 2005.
16. E. Muljadi, C. Butterfield, B. Parsons, and A. Ellis, “Effect of variable speed wind turbine generator on stability of a weak grid”, IEEE Trans on Energy Conversion, vol. 22, no. 1, pp. 29–36, March 2007.
17. N. Ullah and T. Thiringer, “Variable speed wind turbines for power system stability enhancement”, IEEE Trans. on Energy Conversion, vol. 22, no.1, pp. 52–60, Mar 2007.
18. Z. Chen, Y. Hu and F. Blaabjerg, “Stability improvement of induction generator–base wind turbine systems”, IET Renew. Power Gener., vol. 1 no.1, pp. 81–93, 2007.
19. I. Erlich, J. Kretschmann, J. Fortmann, S. Mueller, and H. Wrede, “Modeling of wind turbines based on doubly–fed induction generators for power system stability studies”, IEEE Trans on Power Syst, vol. 22, no. 3, pp 909–919, August 2007.
20. A. I. Estanqueiro, “A dynamic wind generation model for power systems studies”, IEEE Trans on Power Syst, vol. 22, no. 3, pp. 920–928, 2007.
21. F. Wu, X. Zhang, K. Godfrey, and P. Ju, “Small signal stability analysis and optimal control of a wind turbine with doubly fed induction generator”, IET Gener. Trans. Distrib., vol.1, no.5, pp.751–760, 2007.
22. R. Fadaeinedjad, and G. Moschopoulos, “Simulation of a wind turbine with doubly fed induction generator by FAST and Simulink”, IEEE Trans on Energy Conv., vol. 23, no. 2, pp 690–700, June 2008.
23. M. Kayikçi, and J. Milanovic, “Assessing transient response of DFIG based wind plants - The influence of model simplifications and parameters”, IEEE Trans on Power Syst, vol. 23, no. 2, pp. 545–554, May 2008.
24. R. Varma, S. Auddy, and Y. Semsedini, “Mitigation of subsynchronous resonance in a series–compensated wind farm using FACTS controllers”, IEEE Trans on Power Delivery, vol. 23, no. 3, pp 1645–1654, July 2008.
25. A. Ostadi, A. Yazdani and R. K. Varma, “Wind power generator interfaced with a series compensated line”, IEEE Trans on Power Delivery, vol. 24, no. 3, pp. 1504 –1514, July 2009.

26. Arjun Singh Solanki, and Dr. Dolly Thankachan, "A Comparative Study for Effective Distribution Network System among LVDS and HVDS." CSVTU Research Journal ISSN: 0974-8725 Vol. 9(1), 16–22, 2020.
27. Arjun Singh Solanki, and Dr. Dolly Thankachan, "Improving the output efficiency of pv systems under fault using fuzzy-controlled dstatcom systems. "International Journal of Engineering Applied Sciences and Technology", 2020 ISSN No. 2455-2143 Vol. 5, Issue 2, Pages 312-317 June 2020.
28. Prity Kumari, and Dr. Dolly Thankachan, "Enhancing Performance of Load Scheduling Using Grid Learning." Journal of Control and Instrumentation Engineering Volume-6, Issue-2 (May-August, 2020) e-ISSN: 2582- 3000 Page 18-26.